RESIDENTIAL COPPER TUBE BOILERS

Heating Boiler SOLUTION™ Lochinvar®

7 MODELS FROM 45,000 - 260,000 BTU/HR

84% AFUE

GASKETLESS HEAT EXCHANGER

OPERATING CONTROL

BUILT FOR DEPENDABILITY

DESIGNED ★ ENGINEERED ★ ASSEMBLED
USA

Lochinvar®

NO ONE BRINGS IT ALL TOGETHER LIKE LOCHINVAR

Lochinvar is the industry leader that other leading companies call upon for the most advanced and efficient water heating products in the world. For that reason, Lochinvar is trusted to go beyond the call of duty to find a solution for every project, no matter the size. You will not find a water heating company that works harder or cares more.

That's why no one brings it all together quite like Lochinvar.

THE RIGHT INVESTMENT

If you're looking for a heating system for your new home, replacing an old boiler, or thinking about converting from expensive electric heat, Lochinvar's Solution heating boiler is the right heating investment for you. You rarely think about heating your home, that is unless you can't get warm enough, or your monthly heating bill just surpassed your house payment. A reliable and efficient heating system is the key to keeping your family comfortable when the weather turns cold. That's why Lochinvar developed the Solution. This gas-fired boiler stands above any other boiler in it's class in terms of comfort, quality, efficiency, flexibility and dependability.

BUILT FOR DEPENDABILITY

Every Lochinvar boiler is designed, assembled and engineered in the USA. Built to commercial grade standards, the Solution boiler is better designed and better built. And every Solution boiler is quality checked throughout the manufacturing process, giving you a boiler built for dependability. When you select Solution, you get home heating that is economical, reliable, flexible, safe and dependable. And we back it all up with our exclusive 20-year Limited Warranty.

COST SAVINGS HIGH EFFICIENCY

Often times old boilers operate as low as 50% efficiency. This means that 1/2 of your fuel dollars are wasted up the chimney. A Solution boiler, with an annual fuel utilization efficiency (AFUE) of up to 84%, can reduce your heating bills by over 30%. This means that the Solution boiler can actually pay for itself in just a few short years with the money the old system is wasting. If you are currently spending $2,000 each year to heat your home with your old inefficient boiler, your fuel savings could be as much as $800 per year by switching to the 84% efficient Solution boiler. Lochinvar's Solution boiler makes heating your home with gas a smart investment that you'll appreciate for years.

INSTALLATION FLEXIBILITY

Lochinvar designed the Solution to make installations a snap in any home with all piping and venting connections made conveniently from the top of the unit. The Solution is also pre-piped with a pumped performance loop for easy hookup. Lightweight and compact, the Solution's flexibility allows the contractor to spend less time installing your new boiler, which results in savings to you.

BUILT-IN FEATURES

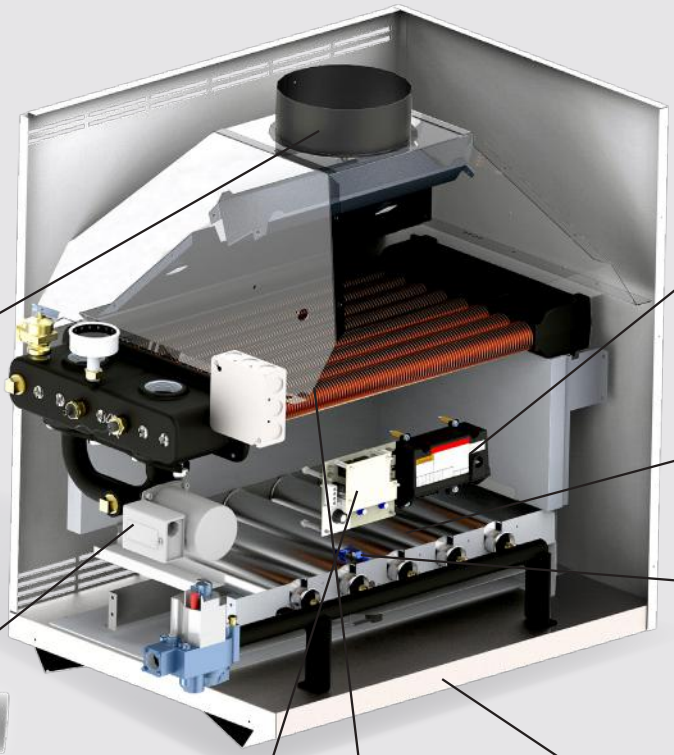

IGNITION CONTROL MODULE

Controls ignition and includes self diagnostic indicator lights.

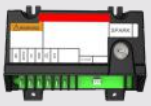

PVC OR CPVC VENT KIT (optional)

Vent up to 25 feet out a sidewall or rooftop with inexpensive PVC/CPVC (CB 45-135).

STAINLESS STEEL BURNERS

Ensure long life without rusting.

BUILT-IN PERFORMANCE LOOP

Ideal for replacing a cast iron boiler, the performance loop saves time and simplifies installation.

INTERMITTENT SPARK IGNITION

The system safely shuts down on loss of pilot flame in less than one second.

COMBUSTIBLE FLOOR BASE

Design certified for combustible floor installations. (Do not install directly on carpeting.)

TEMPERATURE CONTROL WITH DOMESTIC HOT WATER PRIORITIZATION AND OUTDOOR TEMPERATURE RESET

Allows the water temperature produced to vary with the demand of the outdoor conditions and provides domestic hot water production when paired with an indirect storage tank.

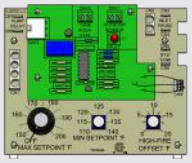

UNIQUE HEAT EXCHANGER DESIGN

You will enjoy years of reliable performance because the Solution is constructed with cast iron headers and a gasketless copper-tube heat exchanger. The combination of a copper heat exchanger with cast iron headers has the unique ability to absorb and transfer heat quickly and efficiently while providing unmatched durability.

TERMINAL STRIPS

Auxiliary power contacts for remote control of louvers and fans.

Also available

KNIGHT® HEATING BOILERS

Need higher efficiency? KNIGHT Heating Boilers are available in sizes from 55,000 to 399,000 Btu/hr and rated up to 98% efficiency in low temperature applications.

SOLUTION BOILER DIMENSIONS AND SPECIFICATIONS

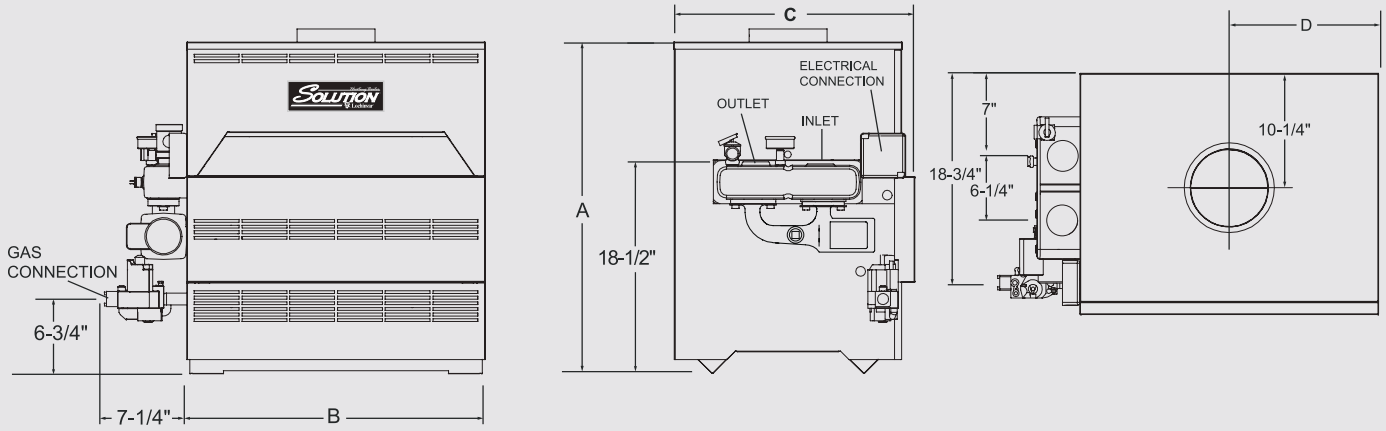

Front View | Side View | Top View

SOLUTION HEATING BOILER (AHRI CERTIFIED)					DIMENSIONS AND SPECIFICATIONS						
Model Number	Input MBH	AFUE %	Heating Capacity MBH	Net AHRI Rating MBH	A	B	C	D	Gas Conn.	Vent Size	Shipping Weight
CBN045	45	84.0	37	32	29-1/2"	11-1/2"	21-1/2"	5-3/4"	1/2"	4"	145
CBN075	75	84.0	62	54	29-1/2"	15-1/2"	21-1/2"	7-3/4"	1/2"	5"	155
CBN090	90	84.0	75	65	29-1/2"	15-1/2"	21-1/2"	7-3/4"	1/2'	5"	155
CBN135	135	84.0	112	97	29-1/2"	19-1/2"	21-1/2"	9-3/4"	1/2"	6"	175
CBN180	180	84.0	149	130	29-1/2"	23-1/2"	21-1/2"	11-3/4"	3/4"	7"	195
CBN215	215	84.0	178	155	29-1/2"	26-1/2"	21-1/2"	13-1/4"	3/4"	7"	220
CBN260	260	84.0	216	188	29-1/2"	29-1/2"	21-1/2"	14-3/4"	3/4"	8"	225

Notes: *Change 'N' to 'L' to denote L.P. gas models*
Net ratings based on piping and pick-up allowance of 1.15
Electrical Requirements: 120 VAC / 2 AMP
Approved for indoor installation only
Water connections are 1-1/2" NPT
Performance data based on manufacturer test results.

*The Net AHRI Water Ratings shown are based on a piping and pickup allowance of 1.15.

STANDARD FEATURES

ASME Copper Finned Tube Heat Exchanger
Gasketless Heat Exchanger Design
Built-In Performance Loop
Vertical Water Connections
24 Volt Control System
Self Diagnostic Ignition Control
Terminal Strip
Intermittent Electronic Ignition
Temperature Control
Outdoor Reset with Outdoor Sensor
Domestic Hot Water Prioritization
Gas Valve w/ Built In Manual Shut-Off
160 PSI Working Pressure
Pump Relay
Automatic Reset High Limit
ASME Pressure Relief Valve
Temperature & Pressure Gauge
Automatic Vent Damper
Built-In Draft Diverter
Stainless Steel Burners
Loch-Heat Ceramic Tile Combustion Chamber
CSA Design Certified for Installation on Combustible Floors
CSA Design Certified for Alcove Installation
20 Year Limited Warranty on the Heat Exchanger (see warranty for details)
2 Year Parts Warranty

OPTIONAL EQUIPMENT

Adjustable High Limit w/ Manual Reset
Flow Switch
Low Water Cut-Off
Stack Frame
Pump Delay w/ Freeze Protection
MP2 Sequencer
PVC/CPVC Venting Kit (CB 45-135)
O2 Barrier Waterways

FIRING CONTROL SYSTEMS

F9 Full Fire Spark Ignition (Standard Construction)
F7 California Code (CB 215-260 only)

FOR EASE IN ORDERING BY MODEL NUMBER

CB	N	045	F9
MODEL	NAT GAS	Btu/hr INPUT	FIRING CONTROLS

This model is a 45,000 Btu/hr, natural gas Solution boiler. It has F9 firing controls

*Lochinvar should be consulted before selecting a boiler for installations having unusual piping and pickup requirements, such as intermittent system operation, extensive piping systems, etc.

Lochinvar, LLC
300 Maddox Simpson Parkway
Lebanon, Tennessee 37090
P: 615.889.8900 / F: 615.547.1000
Lochinvar.com

STACK FRAME